UC32R/L4

The **UC32R/L4** is an external relay pack with 4 pairs of relays, which can be used in Raise/Lower or Binary mode.

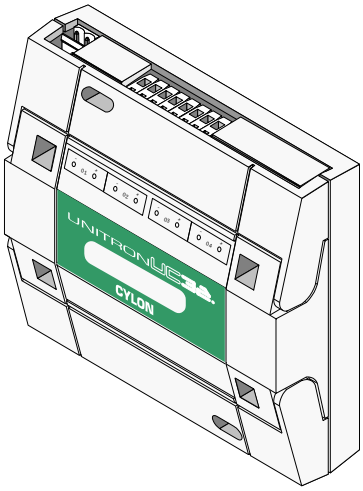

- **Raise/Lower mode**

  with safe interlock for motor protection

- **Binary mode**

  converts 4 analog inputs to 8 digital outputs

- **8 Relays can switch Inductive Loads up to 5A @ 250V AC or 5A @ 30V DC**

- **8 Relays can switch Resistive Loads up to10A @250V AC or 10A @ 30V DC**

The **UC32R/L4** controller is part of the **UnitronUC32** range of products, which offers the following benefits:

Unique Flexibility with UniPuts™

The **UnitronUC32** range uniquely presents **UniPuts™** - a revolutionary answer to flexible point configuration, offering maximised utilisation of controller capacity along with flexibility in strategy changes. Built on a modern web-based architecture, the **UnitronUC32** range has a wide application scope with the flexibility of being stand-alone or network enabled.

Cost Effective, low entry point for building control

The **UnitronUC32** range offers reduced costs in terms of training, implementation, rollout and maintenance. Modular, extendible packages along with low installation costs mean a low entry point for building control. The future-proof **UnitronUC32** range provides forward & backward compatibility, meaning an effortless upgrade path for existing **Unitron** Systems.

Highly programmable and extendable through web-enabled HVAC technology

The **UnitronUC32** range offers an advanced web-based 32-bit architecture, with advanced programmability through the **Cylon Engineering Centre**. Inbuilt diagnostics, along with expanded data logging and strategy storage, is further enhanced by **Uniputs**™, offering up to 8 Universal inputs, up to 8 **Uniputs**™ (AI/DI/AO/DO) and up to 8 **Uniputs**™ with relays.

DATASHEET

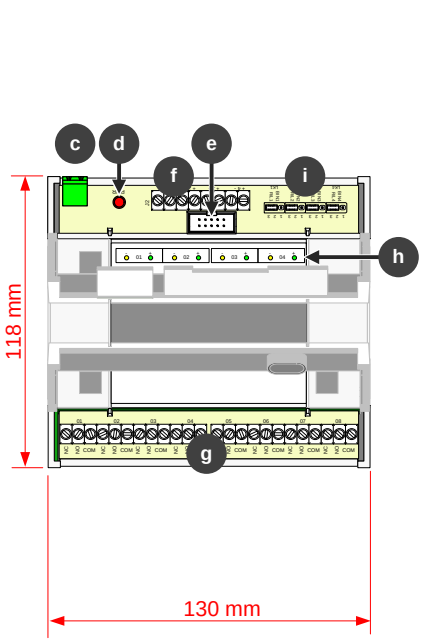

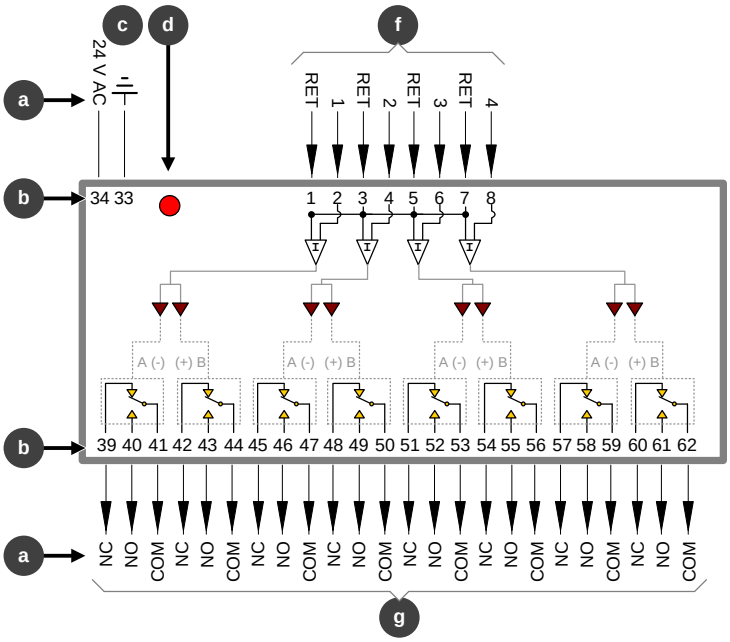

⏚	Common
⊘	Unused terminal
a	Point Numbers
b	Terminal Numbers
c	Power 24 V AC
	Important : Earth this controller by connecting the common wire (G_0 ⏚) on the secondary side of the 24 V AC transformer to Earth at one point.
d	Power LED (red)
e	10-way quick connector *Note: There is no Quick-Connect facility on UnitronUC32/Cylon BACnet controllers. The Quick connector is included for compatibility with legacy products.*
f	Inputs
RET	Return *Note: The Return terminals are not connected to Common ⏚ on the Relay Pack*
g	Relay outputs
COM	Relay Common
NO	Normally Open
NC	Normally Closed
h	LED Indicators Each relay pair is represented by a pair of LEDs, one yellow (marked "-") and one green (marked "+"). When an LED is on, the corresponding relay contact is closed.
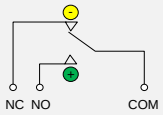	State of Relay Contacts when Green LED is off.
i	Mode Selection jumpers
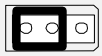	Relay Pair set for Raise-Lower interlock.
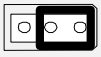	Relay Pair set for Binary conversion.

UK Patent GB 2 400 991
Irish Patent 84413

Specifications:

MECHANICAL

Size (excluding terminal plugs)	145 x 130 x 45 mm (5.7 x 5.12 x 1.78”)
Enclosure	Injection moulded ABS
Mounting	DIN rail

ENVIRONMENT

***Note**: This equipment is intended for field installation within another enclosure.*

Ambient Temperature	0° - 50°C (32°-122°F) ambient.
Ambient Humidity	0% - 90% RH non-condensing
EMC Immunity	EN 50082-1
EMC Emission	EN 55011 Class B

WIRING

***Note**: Use Copper or Copper Clad Aluminium conductors only.*

Termination	I/O : PCB mounted screw terminal connections. Power: PCB mounted plug terminal connections.
Conductor Area	Max: AWG 12 (3.09 mm^2) Min: AWG 22 (0.355 mm^2)

ELECTRICAL

Supply Requirements	24 V AC +/- 20% 50/60 Hz
Transformer Rating	8 VA

INPUTS/OUTPUTS

8 Inputs 	Current: 6mA @ 10V DC each input Voltage: 0 to 10V DC input only Return: The Return wire is common to all inputs	
8 Relay Contacts 	Inductive Load:	5A @ 250V AC or 5A @ 30V DC
	Resistive Load:	10A @250V AC or 10A @ 30V DC
	Normally Open and Normally Closed contacts are available	

UK Patent GB 2 400 991
Irish Patent 84413

CONFIGURATION

There are two modes of operation: Raise/Lower and Binary conversion.
Four links under the terminal cover allow mode selection for each pair of relays.
Any combination of Raise/Lower or Binary Mode outputs possible, e.g. 1 R/L and 3 Binary Mode outputs.
Each RL/4 input allows two relays to be controlled by one UC controller output

Raise/Lower Interlock Mode

Red LED (24 Vac supply)	Input	Relay A (-)	Relay B (+)	Yellow LED (-)	Green LED (+)	Contact Status
Off	Don't Care	Off	Off	Off	Off	Lower motor powered
On	0 V	Off	Off	On	Off	Lower motor powered
On	5 V	On	Off	Off	Off	No power to either motor
On	10 V	On	On	Off	On	Raise motor powered

In Raise/Lower Mode, the interlock wiring shown will only allow one motor to be connected to mains at any time, for all input voltages

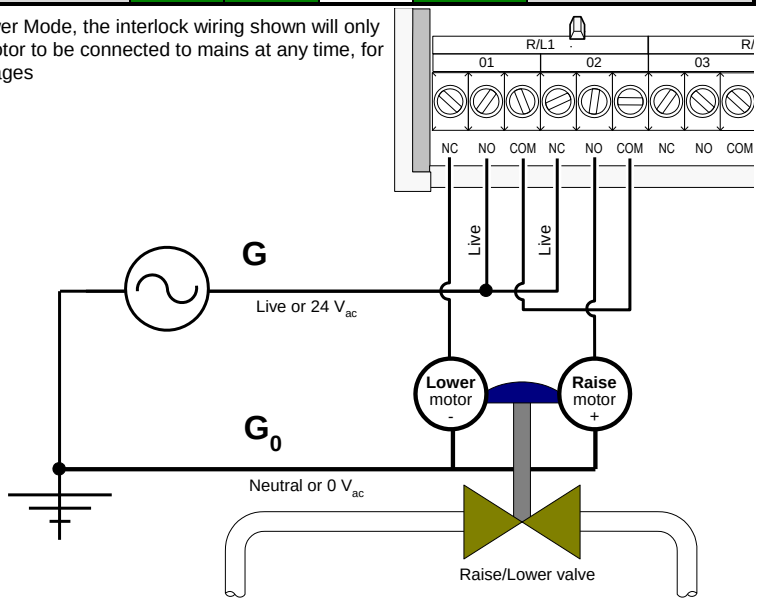

Binary Conversion mode

Red LED (24 Vac supply)	Input	Relay A (-)	Relay B (+)	Yellow LED (-)	Green LED (+)
Off	Don't Care	Off	Off	Off	Off
On	0 V	Off	Off	Off	Off
On	4 V	On	Off	On	Off
On	7 V	On	On	On	On
On	10 V	Off	On	Off	On

UK Patent GB 2 400 991
Irish Patent 84413